# PCX Mirror Installation Instructions

Tools Needed:
Allen Wrench

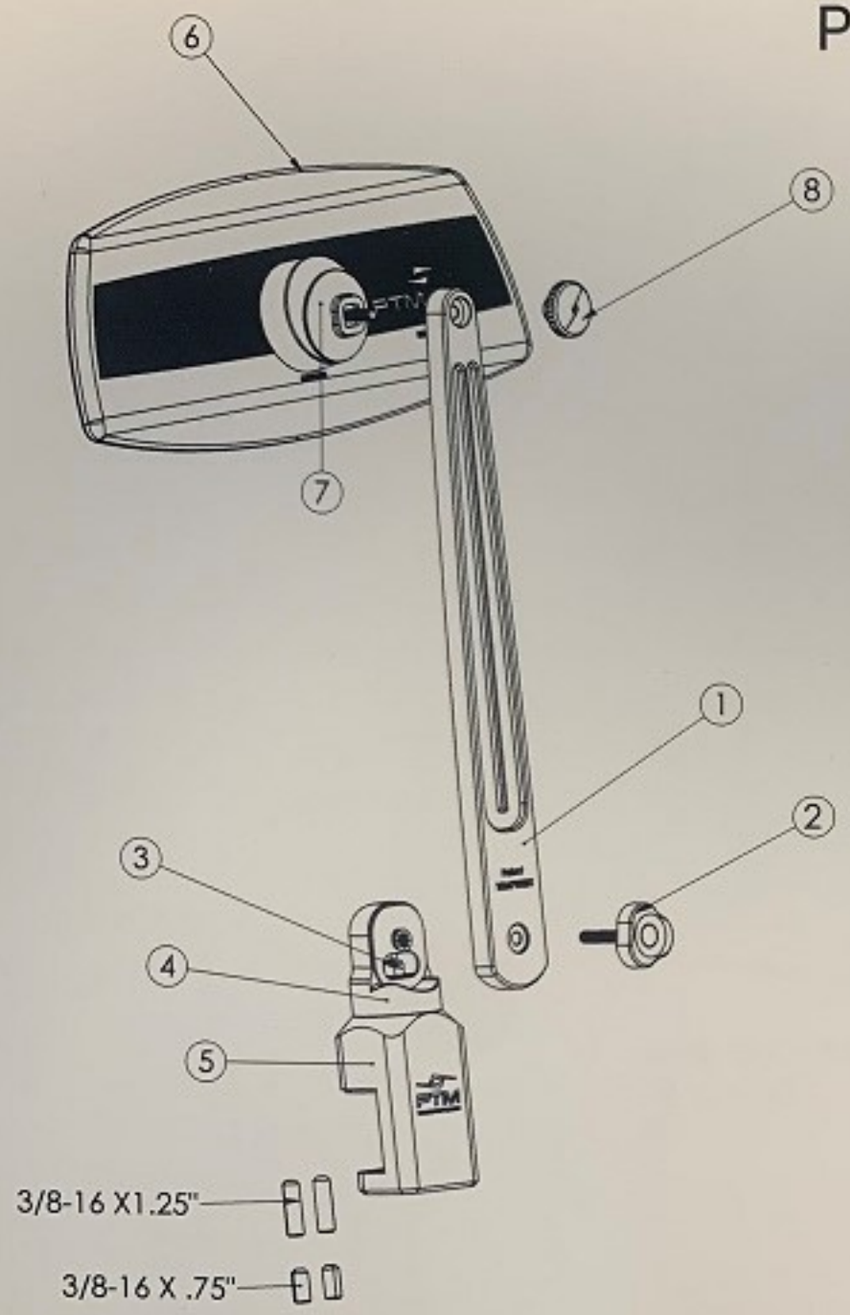


1. Detach the mirror arm (1) from the mirror pivot (3) by turning the knob (2) counter-clockwise.
2. Postion base (5) onto desired location and determine which set screws will best fit the boat.
3. Apply small bead of thread locker to the set screws.
4. Attach the base using chosen set screws with Allen Wrench (not included).
5. Loosen nut (3) in mirror base (4) with supplied wrench.
6. Rotate the mirror pivot (3) to desired location and tighten nut.
7. Attach the spacer (7) to mirror housing (6) as shown.
8. Attach the mirror housing (6) to arm (1) as shown using knob (8).
9. Attach the arm (1) to pivot (4) using knob (2).
10. Once you have the mirror where you want, tighten the knob (2) until the arm is secure.

Contents of box:

1. Mirror Bracket Assembly
2. Pair of 1-1/4" Set Screws
3. Pair of 3/4" Set Screws
4. Thread Locker
5. VR-100 PRO Mirror
6. Washer

PTM
WATERSPORTS

1010 Larson Dr. | Oak Ridge, TN 37830
865.425.0600 | support@protomet.com